Program Director's Report

Presented to the

TransLink® Management Group

February 25, 2008

Smart Card. Smart Travel.

Contents

I. Executive Summary
II. Project Status
III. Agency Flowcharts
IV. Progress Photographs
V. Progress Payments
VI. Phase II Operations
VII. Future Agenda Items
Appendix
- Reference Tables
- Abbreviations
- Definitions

Highlights and Milestones

- Vehicle on-board equipment Installation at MTA is now 89% complete.
- CID3s are all installed and operational at MTA's exit gates.
- CID2s have been installed at the IIT stations on the Caltrain system.
- Field tests (IIT) started on February 20th at MTA and Caltrain.
- BART's Integration 6 testing is on hold until Data Store issues are corrected.
- The Data Store software has been upgraded to rectify the recently identified issues. The new software is now being tested in Concord prior to release to the production system.

CID3 Readers at MTA Exit Gates

Highlights and Milestones (cont.)

- Plans for regional testing now include cycle testing at BART faregates, with other operator participation optional.
- A website maintenance agreement has been reached with Motorola. Also a new home page design was launched recently.
- MTC is working with Motorola to design a new training program for the TransLink® Customer Service Representatives.
- A subcommittee of the Operations Liaison Committee is being formed to review the settlement process in general and review settlement issues as they occur.
- Contractual train-the-trainer sessions are currently being scheduled and completed with each 2.3 operator.

Issues and Actions

Topic	Issue	Status / Action
Schedule Delays	Revenue ready dates for several operators continue to be delayed.	•Achievement of Phase 2.3 and other remaining Revenue Ready Milestones are at least 18 months overdue: SF MTA's date was October 19, 2005; BART's was March 30, 2006; Caltrain's was December 5, 2006." •Current schedules show Revenue Ready dates of: March 31, 2008 for MUNI and Caltrain, May 2, 2008 for BART and July 23, 2009 for VTA and Samtrans. SanTrans schedule is not approved yet.
Declaratory Relief	MTC's outside counsel filed a request for declaratory relief with respect to Motorola's position as the prime contractor for TransLink®.	•The U.S. District Court granted MTC's motion for judgment on the pleadings, in its declaratory relief action against Motorola on January 31, 2007, and Motorola appealed the order to the Ninth Circuit. •Motorola filed its appellate brief on July 23, 2007. •MTC filed its brief on September 14, 2007. •The hearing will likely occur sometime in 2008.
Point of Sale Network Claim	The Contractor claims it is entitled to a 2.5% third party load fee.	•The claim was received December 13, 2006. •Motorola has agreed to mediation regarding this claim. •Mediation occurred on October 22nd. •There were no clear agreements from the mediation.

Site Preparation

- Caltrain construction at stations is complete. Minor punchlist issues are being encountered as a result of the AT&T circuit installs.
- VTA's Cerone Yard is 85% complete.

Installation

- Installation continues on MTA's fleet. 89% of MTA's entire fleet has been installed. Work has been completed at the Presidio, Potrero, Metro/Green and Kirkland yards.
- AT&T circuit installation for Caltrain network is complete at 29 of 31 stations.
- CID 2A's have been installed at Caltrain IIT stations.
- AT&T circuit installation for the BART HCR network is complete at 42 of 43 stations.
- AVM upgrades at MTA are ongoing. All downtown station AVM's have been fully commissioned.
- All CID 3B's have been installed and are operational at MTA stations.
- BART is currently installing faregate SAMs.

Testing

- IIIT (lab tests) complete
- IIT (field tests)
  - IIT procedures developed for 2.3 operators.
  - IIT has begun for MTA CID 2s and CID3s and Caltrain CID 2s
- Other testing
  - BART Integration 6 testing is on hold. ERG is working through issues with data store delivery of files.
  - BART has submitted a revised procedure for their Revenue Test, including the cycling test.
  - BART is currently requesting funding for a “regional” cycle test to be conducted at BART faregates.

TransLink® Point of Sale (POS) Activity

- Total POS sales for the month of January were approximately $47,400 in e-cash value and $13,700 in AC Transit passes.
- Eight Walgreens stores have TransLink POS terminals installed and are vending TransLink® cards and value.
- The stores are located in: Cotati, Mill Valley, San Rafael, Santa Rosa, San Anselmo, Oakland and 2 in San Francisco at 825 and 1301 Market Street.
- Additional Walgreens stores will be rolled out in the coming months,
- The first 33 Walgreens will be in the East Bay to fill out the POS network in AC Transit's service area. These are expected to be in place in about six weeks.

Eight Walgreens stores are already selling TransLink cards and value

TransLink® Point of Sale (POS) Activity (cont.)

- Top sales locations for January were:
  - North Bay: Raley's (overall top sales) in Rohnert Park: $4,476 and Old Town Liquors in Novato: $2,130
  - East Bay: Walgreens @ 13th & Broadway in Oakland: $3,936 and Ciudad de Mexico in Oakland: $2,850
  - San Francisco: News and More: $3,380 and News Spot Montgomery: $3,156
- Recruitment of Phase 2.3 POS locations has been going well, with only a few more stores needed in the South Bay

Marketing and Outreach Activities

- A new home page design for the TransLink® website was launched at the end of the year. New page layouts and navigational changes are also being developed.
- Additional advertising by both AC Transit and Golden Gate will begin in February and March, including on-board and exterior bus ads.
- The next version of cardholder and marketing brochures are being finalized to incorporate 2.3 agency information.
- SFMTA's Marketing Plan was presented to the Marketing Subcommittee on February 6th.

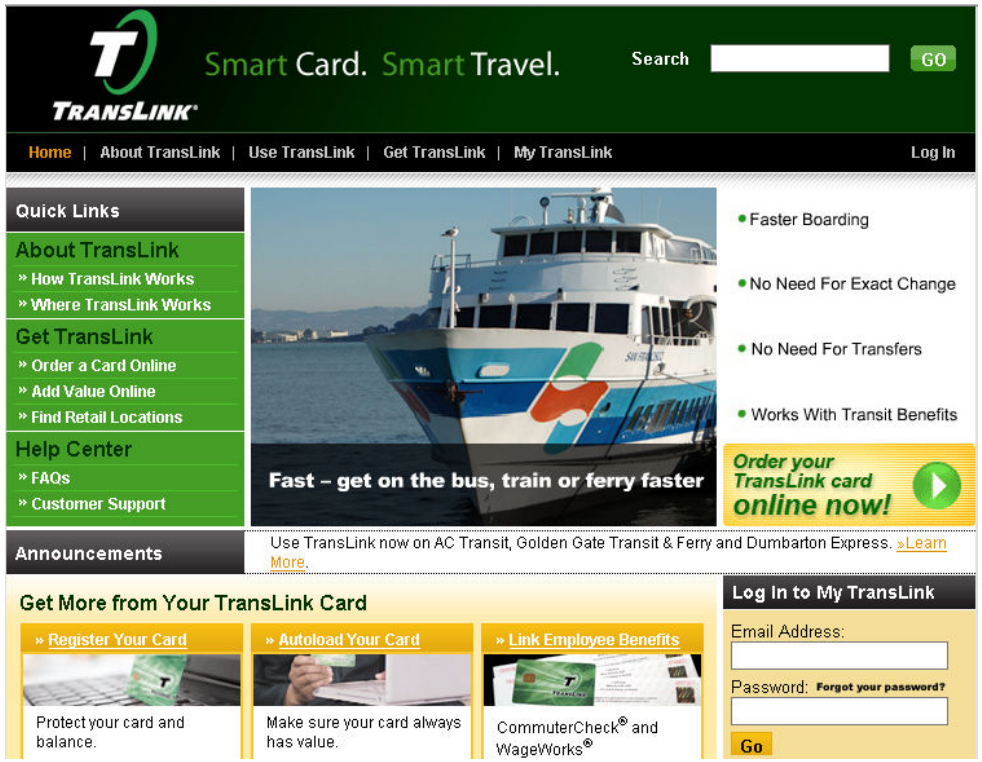

New homepage design for translink.org

Training

- Train-the-trainer activities have begun and the training material development process nears completion. The current pace appears to be on target for Phase 2.3 Revenue Ready.

Training Status

Material Development & Approval

	#Modules	Completed	To Do
MTA	17	11	6
CalTrain	10	4	6
BART	8	6	2

Training Sessions Held

	#Modules	Conducted	To Do
MTA	18	6	12
CalTrain	11	4	7
BART	8	0	8

Miscellaneous

- Card Procurement Activities
  - MTC has approved the card proofs for the order of 95,000 cards.
  - Based on approval of the TMG, MTC has developed the contract amendment to procure an additional 450,000 cards. The outside appearance of these cards will be the same as the current cards. However, the embedded electronic chip will be of a new configuration. The new chip will have the same functionality as the current cards.
- Youth/Senior Cards
  - BART has taken the lead to develop a plan for distribution of youth and senior cards.

BART

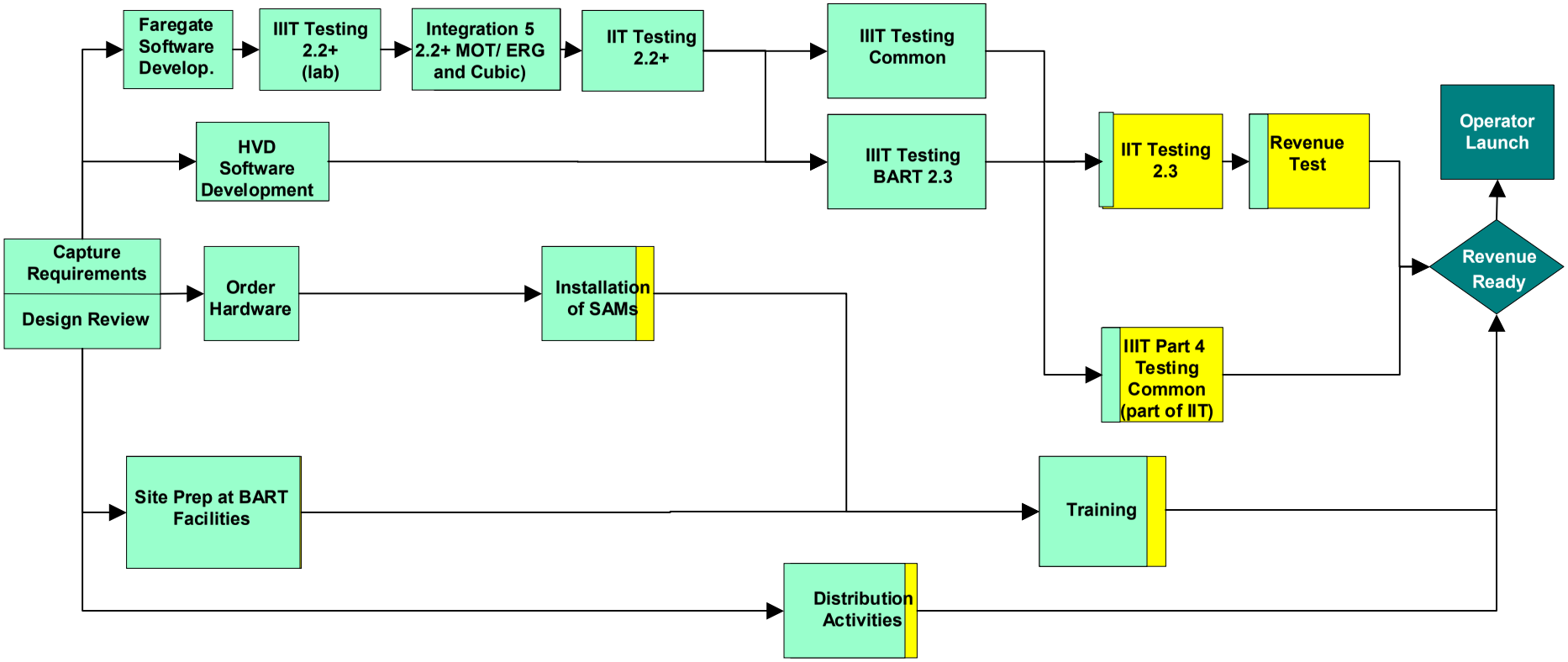

IIIT-	Interface and Integration Inspection and Testing
IIT-	Installation Inspection and Testing
2.2 Plus -	Adds BART basic transactions for the faregates onto the 2.2 back-end
HVD-	High Value Discount

SFMTA

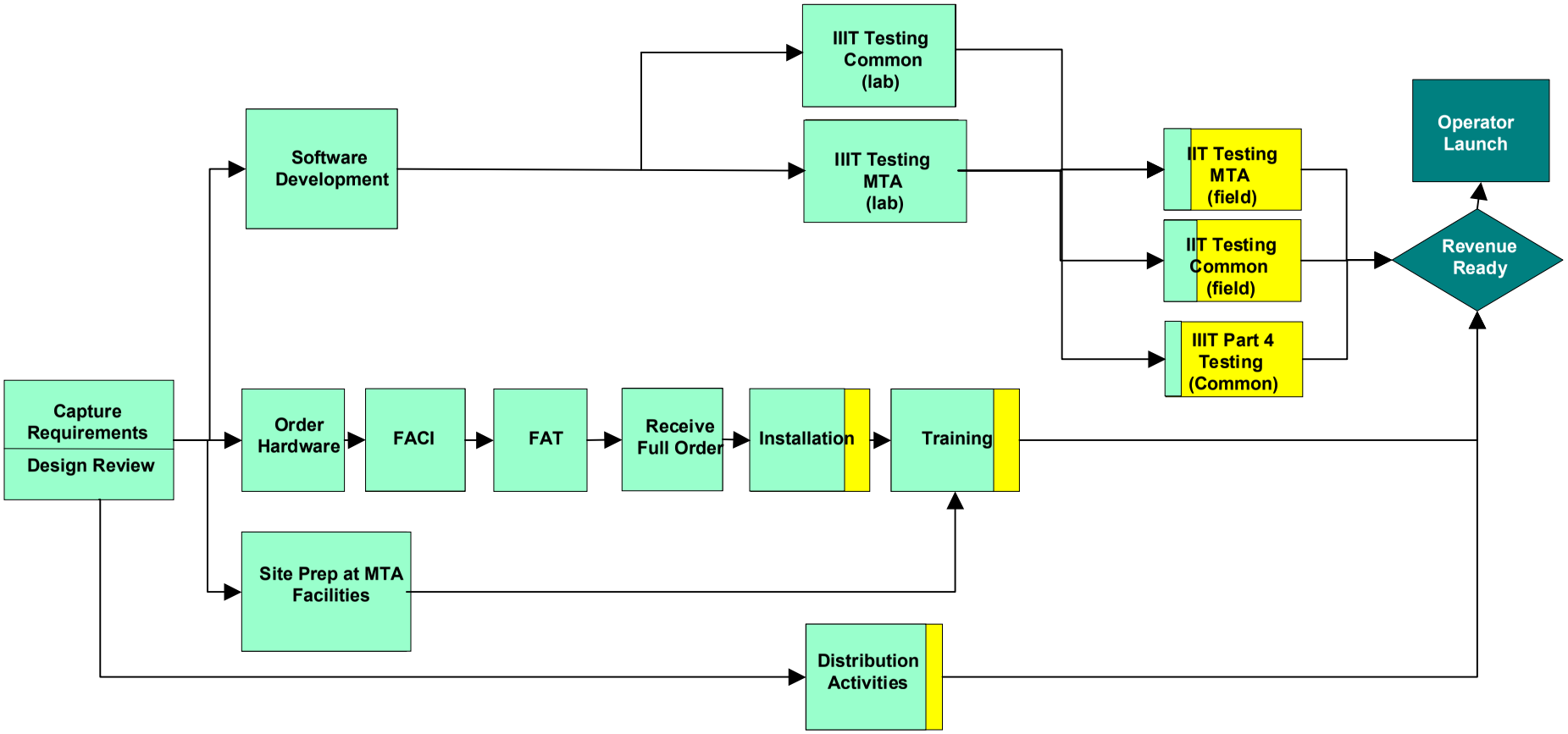

IIIT- Interface and Integration Inspection and Testing
IIT- Installation Inspection and Testing
FACI - First Article Configuration Inspection
FAT - First Article Testing

Caltrain

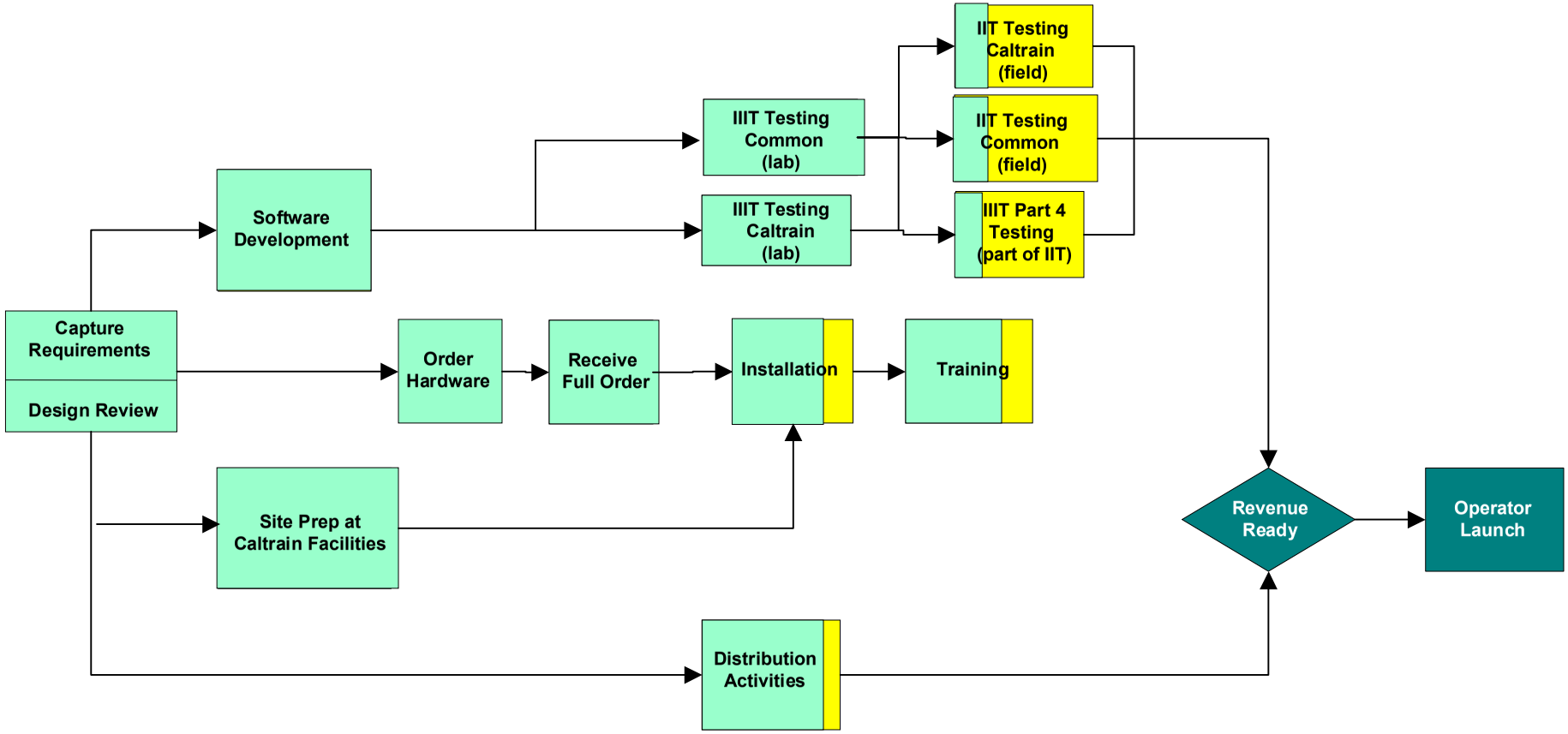

IIIT- Interface and Integration Inspection and Testing
IIT- Installation Inspection and Testing
FACI - First Article Configuration Inspection
FAT - First Article Testing

Progress Photographs

CID2s at Caltrain Station

Tagging Caltrain CID2s

MTA Vehicle Installation

V. Progress Payments

Invoices Received Since 10/15/2007

Invoice Number	Milestone/Cost Description	Invoiced Amount	Total Amount Approved	Date Received	Approval Status
50080450	Design Milestone #4 Progress - Enable CIDs to Display Transfer Expiration Time	$11,000.00	$0.00	10/17/2007	Rejected
50080528	Phase II IIIT Complete - Muni Faregate Retrofit	$89,076.00	$89,076.00	1/14/2008	Approved (25% Withheld)
50080529	Phase II IIIT Complete - Caltrain Dual Tag IIIT Complete	$131,128.50	$0.00	10/22/2007	Rejected
50080530	Phase II IIIT Complete - TOT GUI Improvements	$133,563.90	$133,563.90	1/14/2008	Approved (25% Withheld)
50080690	Phase 2.3 Training - Muni Training Courses	$3,210.00	$3,210.00	10/24/2007	Approved (25% Withheld)
50080691	Phase 2.2 Equipment - AC Transit Remote Keypads	$5,468.66	$5,732.21	10/24/2007	Approved (25% Withheld)
50080692	Phase 2.2 Equipment - AC Transit CID 1As	$37,241.67	$39,036.44	10/24/2007	Approved (25% Withheld)
50080693	Claim Settlement - Add Fare Machine Functionality Claim Settlement	$61,439.00	$61,439.00	11/21/2007	Approved (25% Withheld)
50080887	September 2007 - TSB Activities	$363,595.74	$363,241.47	11/6/2007	Approved (25% Withheld)
50081047	October 2007 - TSB Activities	$350,955.22	$349,773.11	11/26/2007	Approved (25% Withheld)
50081124	Phase 2.3 Training - Phase 2.3 Training Development and Delivery	$20,043.00	$20,043.00	11/29/2007	Approved (25% Withheld)
50081382	November 2007 - TSB Activities	$345,444.97	$344,271.28	12/10/2007	Approved (25% Withheld)
50081599	Phase 2.3 Training - Development of BART and Muni Training Classes	$6,863.00	$6,863.00	1/4/2008	Approved (25% Withheld)
50081824	Phase II IIIT Complete - BART High Value Discount	$260,660.10	$260,660.10	1/18/2008	Approved (25% Withheld)
50081825	Phase II IIIT Complete - Caltrain Dual-Tag Zone-Based Fare System	$131,128.50	$131,128.50	1/18/2008	Approved (25% Withheld)
50081826	Phase II IIIT Complete - Modify Adult Card Registration Process	$17,557.50	$17,557.50	1/18/2008	Approved (25% Withheld)
50081828	December 2007 - TSB Activities	$361,191.05	$0.00	1/18/2008	Under Review
50082000	August-November 2007 - Changes to the TransLink® Website	$6,575.00	$6,575.00	1/28/2008	Approved (25% Withheld)
50082001	Phase 2.3 Training - Overview, Customer Svc, Maintenance, Etc. Courses	$9,584.00	$9,584.00	1/28/2008	Approved (25% Withheld)
Total		**$2,345,725.81**	**$1,841,754.51**		

TransLink® Card Distribution

- Since Nov. 2006, distributors have issued about 41,800 TransLink cards
  - 24,600 Adult, Senior and Youth cards
  - 17,200 RTC TransLink cards
- During January:
  - Transit agency ticket offices sold almost 600 cards
  - Point of sale locations sold over 300 cards
  - TSB issued over 1,100 cards
  - The RTC Discount Card Program issued about 2,600 RTC TransLink Cards

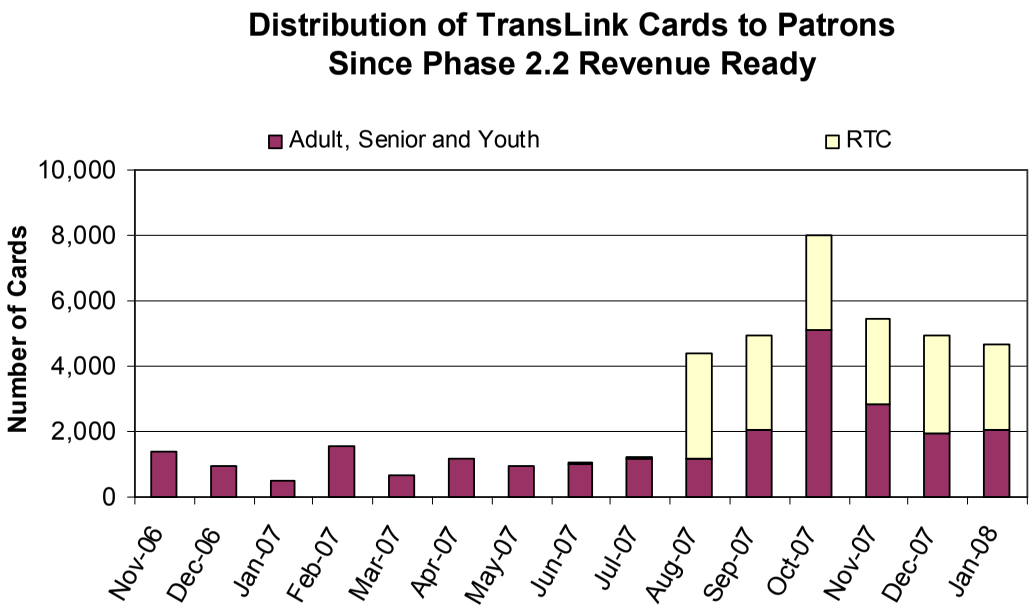

Ridership by Operator

- As of the end of January, TransLink® is recording an average of 12,075 weekday boardings.
  - –6,250 boardings on AC Transit
  - –3,325 boardings on Golden Gate Transit
  - –2,025 boardings on Golden Gate Ferry
  - –475 boardings on Muni*

*This number includes testing transactions as well as actual Muni Metro light rail passenger boardings

Average Weekday TransLink® Ridership by Operator

During the Previous 12-Month Period

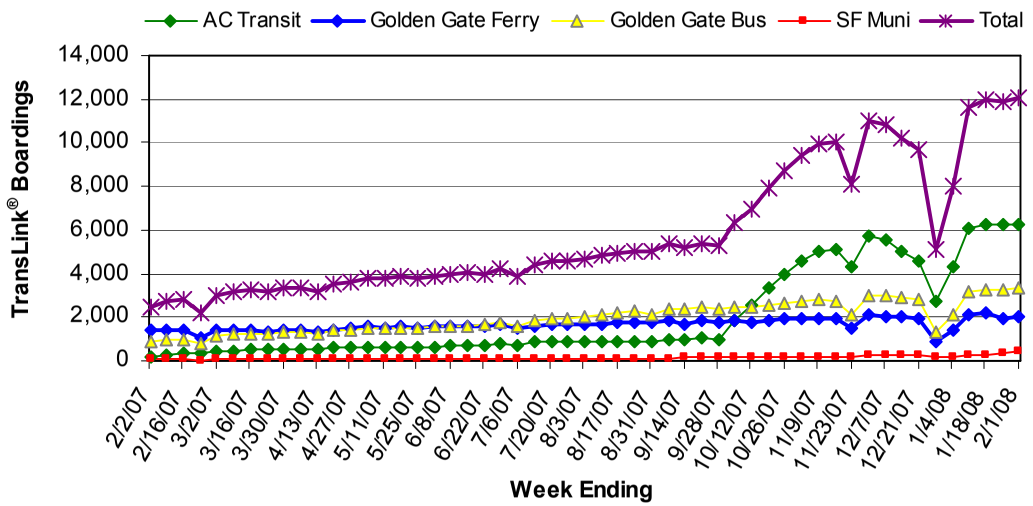

Total Fee Generating Transactions

(Includes Fare Payment, Add Value and Refund Transactions)

December = 207,288

January = 281,729

System Performance Status – October 2007

Performance Metrics – Current Status

Availability Performance as of 2/2/08

Device	Goal	Status
AVM	99.73%	100%
TOT	99.73%	99.79%
TDS	99.73%	100%
TCS	99.73%	100%
Data Store	99.73%	100%
Report Server	99.73%	100%

Reliability Performance as of 2/2/08

Device	Requirement (MOHBF)*	Status (MOHBF)*
AVM	3,750	13,160
CID1	7,500	6,579
CID2	3,750	9,870
TOT	3,750	1,974
HCR3	15,000	32,242

*Mean Operating Hours Between Failures

Accuracy Performance for January

Device	Accuracy Requirement	Reported Accuracy
AVM	99.73%	N/A
TOT	99.73%	N/A
CID	99.73%	N/A

- Accuracy measurements are not available currently due to a reporting problem.
- The Contractor's investigation into the CID1 issues on AC Transit vehicles is ongoing.
- The cutover to the Phase 2.3 backend created some issues with Phase 2.2 TOT functionality. A fix for the issue is being tested.

Customer Experience

- The cardholder support phone system routed about 2,950 calls to customer service representatives (CSRs) in January
  - About 3% of calls were routed through the Spanish and Mandarin language queues
  - The cardholder support line now offers a feature that identifies the number of calls in the queue and the estimated wait time

- The TransLink website had almost 12,000 unique visitors in January
  - Cardholders continue to offer suggestions for additional website content and functionality (e.g., online balance and transaction histories).

Future Agenda Items

	TransLink® Operating Group			TransLink® Management Group		
Date	11-Feb	10-Mar	14-Apr	25-Feb	19-May	25-Aug
Location	BART	AC Transit	MTC	BART	MTC	SFMTA
CIMS Funding	A			A		
CIMS Update	I	I	I	I	I	I
Integrated Fare Study				I	A	
SFMTA Marketing Funding Agreement		A			A	
TransLink Consortium Support				A		
BART Marketing Funding Agreement	A			A		
Youth/Senior Citizen Distribution Strategy		I	A		A	
Amendment to Contract with Booz Allen Hamilton	A			A		
Regional Revenue Cycle Test Plan	A			A		

A = Approval I = Information

Reference Tables

Phase II Capital and Maintenance Payments to Motorola

Fiscal Year	Design	Implementation	TransLink® Cards	Equipment	Maintenance	Other	Total
FY 2002-03	$581,500	$1,584,958	$0	$0	$0	$3,200	$2,169,658
FY 2003-04	$621,273	$1,011,519	$0	$3,085,125	$0	$0	$4,717,916
FY 2004-05	$2,047,522	$1,136,406	$1,502,838	$46,565	$0	$0	$4,733,331
FY 2005-06	$1,371,865	$194,058	$0	$133,750	$0	$0	$1,699,672
FY 2006-07	$2,644,946	$908,733	$17,391	$3,696,265	$341,342	$10,700	$7,619,378
FY 2007-08	$559,861	$6,652	$23,996	$205,631	$240,044	$0	$1,036,184
Total	**$7,826,967**	**$4,842,326**	**$1,544,225**	**$7,167,335**	**$581,386**	**$13,900**	**$21,976,139**

Note: Amount for FY 2006-07 does not reflect withholding of 25% of payments after April 26, 2007 because the full amount will be due to Contractor when Contractor achieves required milestones.

Reference Tables

Recent Phase II TransLink® Service Bureau Operations Payments

Invoice Description	Total Amount Paid	Estimated MTC Share	Estimated Transit Agency Share	Notes
TSB Activities - November 2006	$286,182.30	$285,149	$1,033	
TSB Activities - December 2006	$275,986.22	$268,877	$7,109	
TSB Activities - January 2007	$272,554.59	$268,513	$4,042	
TSB Activities - February 2007	$274,458.57	$268,777	$5,682	
TSB Activities - March 2007	$274,166.33	$268,163	$6,004	25% Withheld
TSB Activities - April 2007	$274,733.57	$268,173	$6,561	25% Withheld
TSB Activities - May 2007	$275,191.54	$268,397	$6,794	25% Withheld
TSB Activities - June 2007	$276,816.90	$269,580	$7,237	25% Withheld
TSB Activities - July 2007	$276,795.34	$268,561	$8,234	25% Withheld
TSB Activities - August 2007	$338,278.48	$328,864	$9,415	25% Withheld
TSB Activities - September 2007	$363,241.47	$350,692	$12,549	25% Withheld
TSB Activities - October 2007	$349,773.11	$332,730	$17,043	25% Withheld
TSB Activities - November 2007	$344,271.28	$325,865	$18,406	25% Withheld
Total	**$2,486,885**	**$2,434,190**	**$52,695**	

Reference Tables, cont'd

Cost Change Orders Executed Under MTC's Authority in FY08

CO No.	Title	Description	Net Cost
99	TOT Keyboard	Electronic Keyboard for TOT	$10,979
100	Equipment Quantities	Equipment Quantities Amendment for Phase 2.3 Operators	$14,504
		TOTAL	**$25,483**

Abbreviations

- **AVM** Add Value Machine
- **CD** Configuration Data
- **CID** Card Interface Device
- **CIPP** Card Initialization, Printing and Personalization
- **FACI** First Article Confirmation Inspection
- **FAT** First Article Testing
- **FRB** Failure Review Board
- **HCR** Hand-held Card Reader
- **IIIT** Interface and Integration Inspection and Testing
- **IIT** Installation Inspection and Testing
- **KPI** Key Performance Indicator
- **MASS** Multiple Application Smartcard System
- **MTBF** Mean Transactions Between Failures
- **MOHBF** Mean Operating Hours Between Failures
- **OBE** On-Board Equipment
- **OCMS** Operations, Configuration and Management System
- **OFS** Off-Line Server
- **OLS** On-Line Server
- **OWS** Operator Work Station
- **PIO** Public Information Officer
- **RCDA** Referential Configuration Data Administrator
- **SAM** Security Access Module
- **TDS** TransLink® Data Server
- **TSB** TransLink® Service Bureau
- **TOT** Ticket Office Terminal
- **TRU** TransLink® Retail Unit
- **UD** Usage Data

Definitions

- **Launch** This event occurs when a transit operator determines that its soft launch has been successful enough to allow entry into service with the general public. The Hard Launch will include media events and appropriate advertising to promote the use of TransLink®.
- **Pre-Launch** A Soft Launch occurs when a transit operator determines that all affected departments within the agency are ready to accept payment through the TransLink system. A Soft Launch will likely include a select group of users for a set period of time. A Soft Launch is not a requirement for operators.
- **Progress Payments** Progress Payments are incremental payments for activities that are not yet complete. Progress Payments are governed by the language in the contract.
- **Punch List** With respect to the TransLink system, the Punch List is a collection of issues not completely addressed by the Contractor prior to Revenue Ready. Each item is agreed by MTC and respective operator(s) affected and includes a date by which the Contractor will complete the work necessary to resolve the issue.
- **Revenue Ready** As defined in Article 8.2, Part 1 of the TransLink Contract, MTC will issue one Certificate of Revenue Ready Status for each Phase II Operator when the Contractor has complied with the Contract requirements in the following areas:
  - All equipment has been installed and the Installation Inspection and Testing, as required under Volume B, Statement of Work, Section B4-4.3 has been completed;
  - The Contractor has hired all personnel designated for the operations and maintenance of the particular Phase in Contractor's Program Implementation Master Plan required under Volume B, Statement of Work, Section B4-4.1.1;
  - The Contractor has completed all of its contractual training obligations required by Volume B, Statement of Work, Section B4-4.6.